KB971,2,5,8ALB
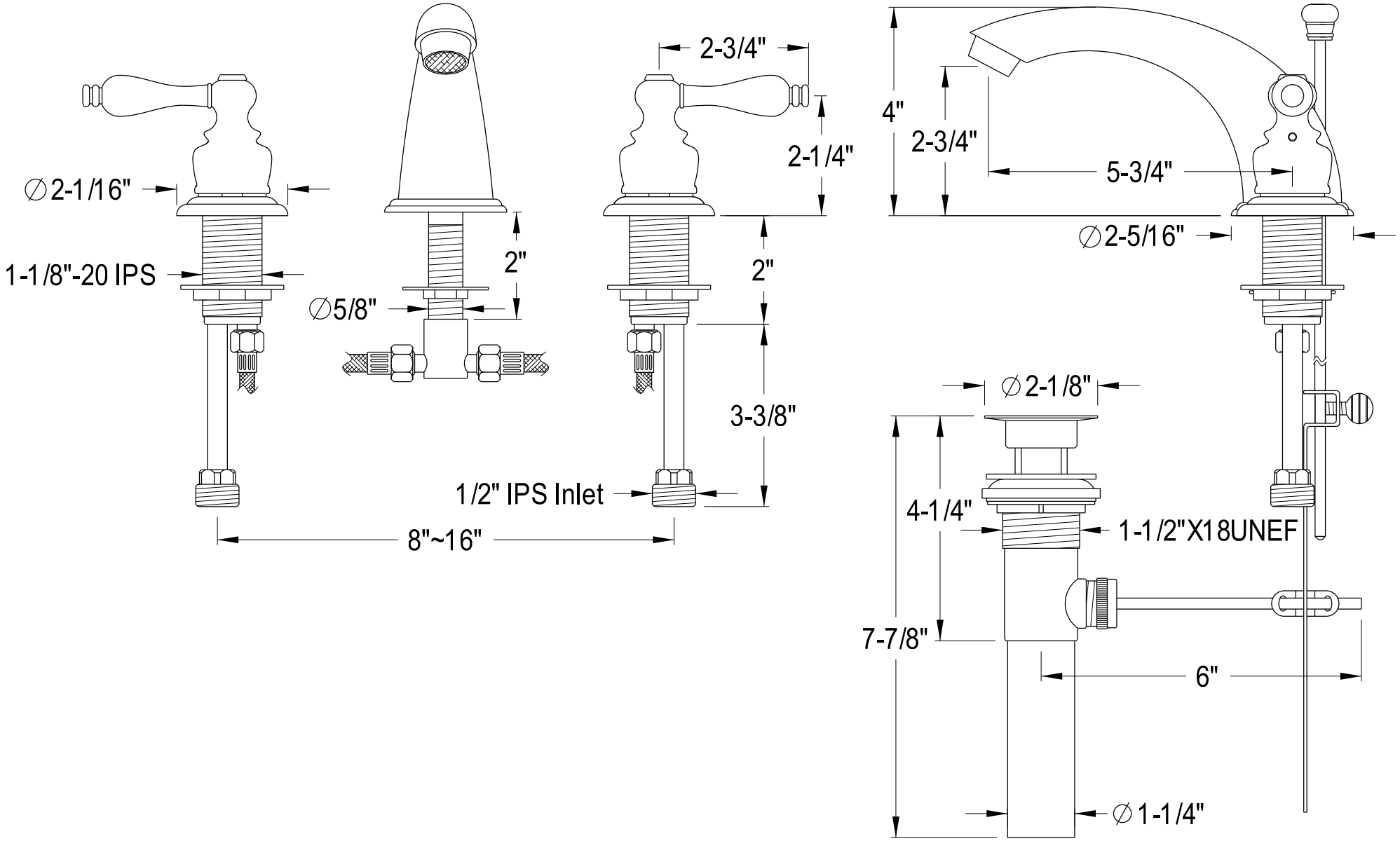
Widespread Lavatory Faucet With Brass Pop-Up